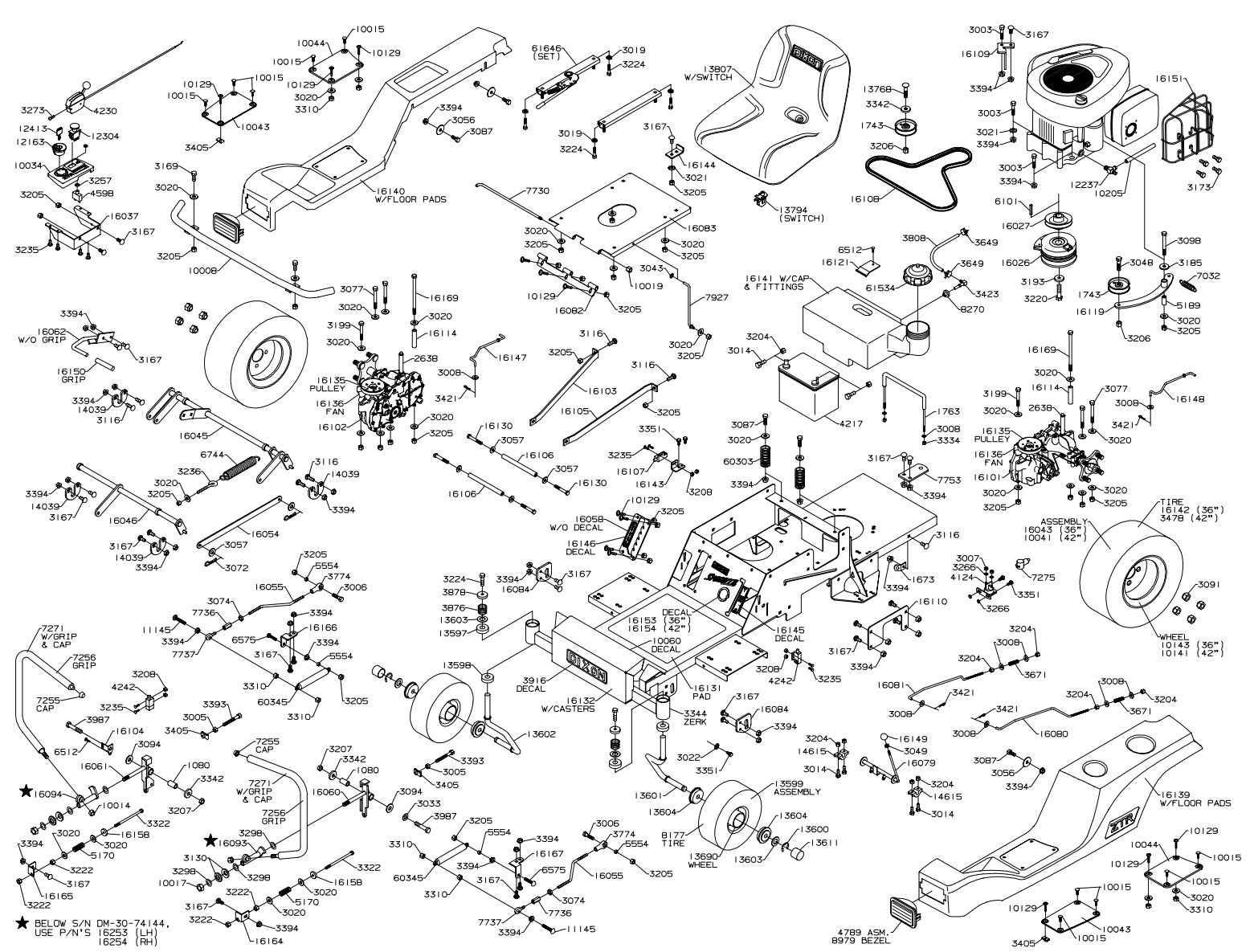

MODEL YEAR 2004 **ZTR 15-105** **SPEEDZTR CHASSIS**

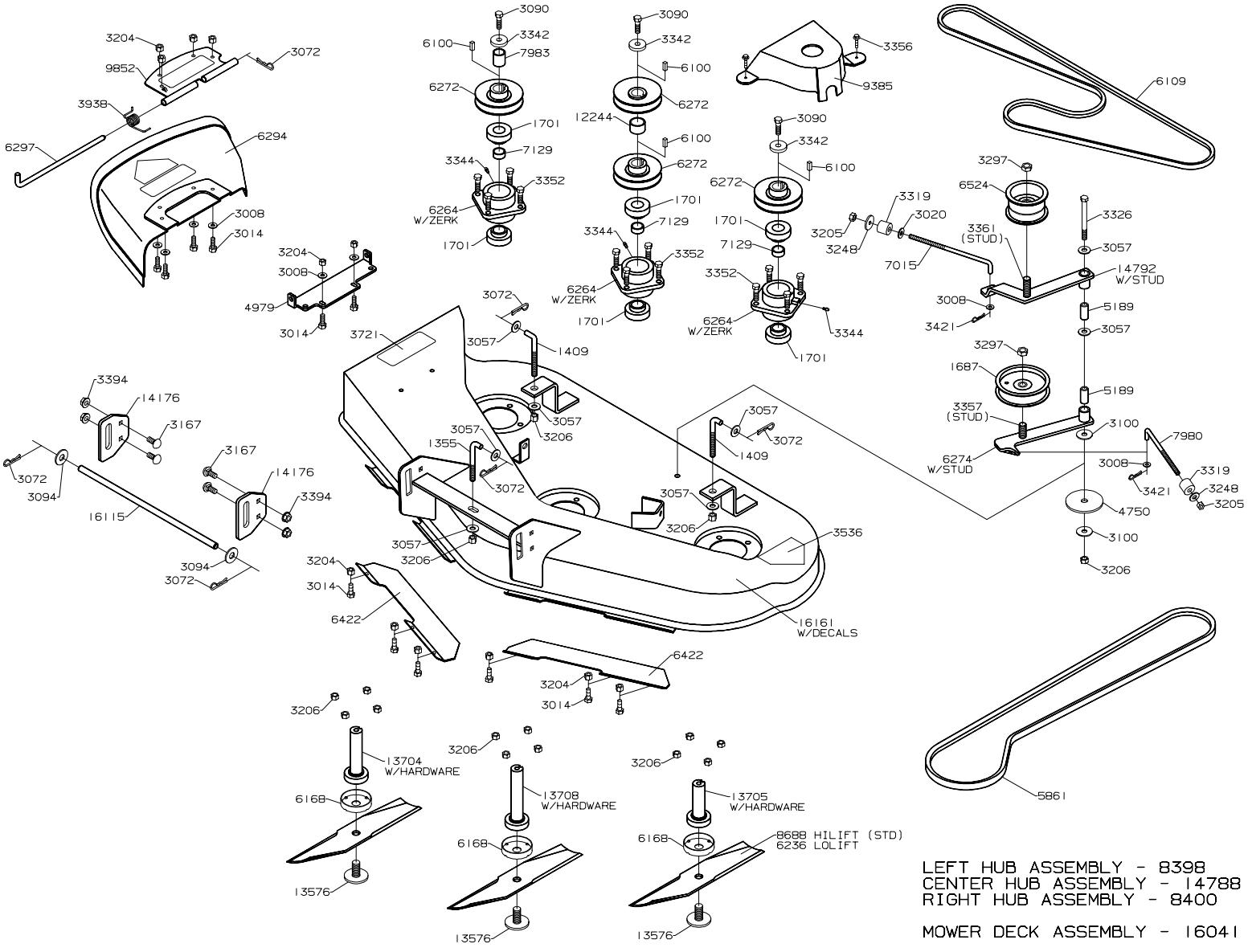

LEFT HUB ASSEMBLY - 8398
CENTER HUB ASSEMBLY - 14788
RIGHT HUB ASSEMBLY - 8400

MOWER DECK ASSEMBLY - 16041

MODEL YEAR 2004 ZTR 15-105 SPEEDZTR 42" MOWER DECK

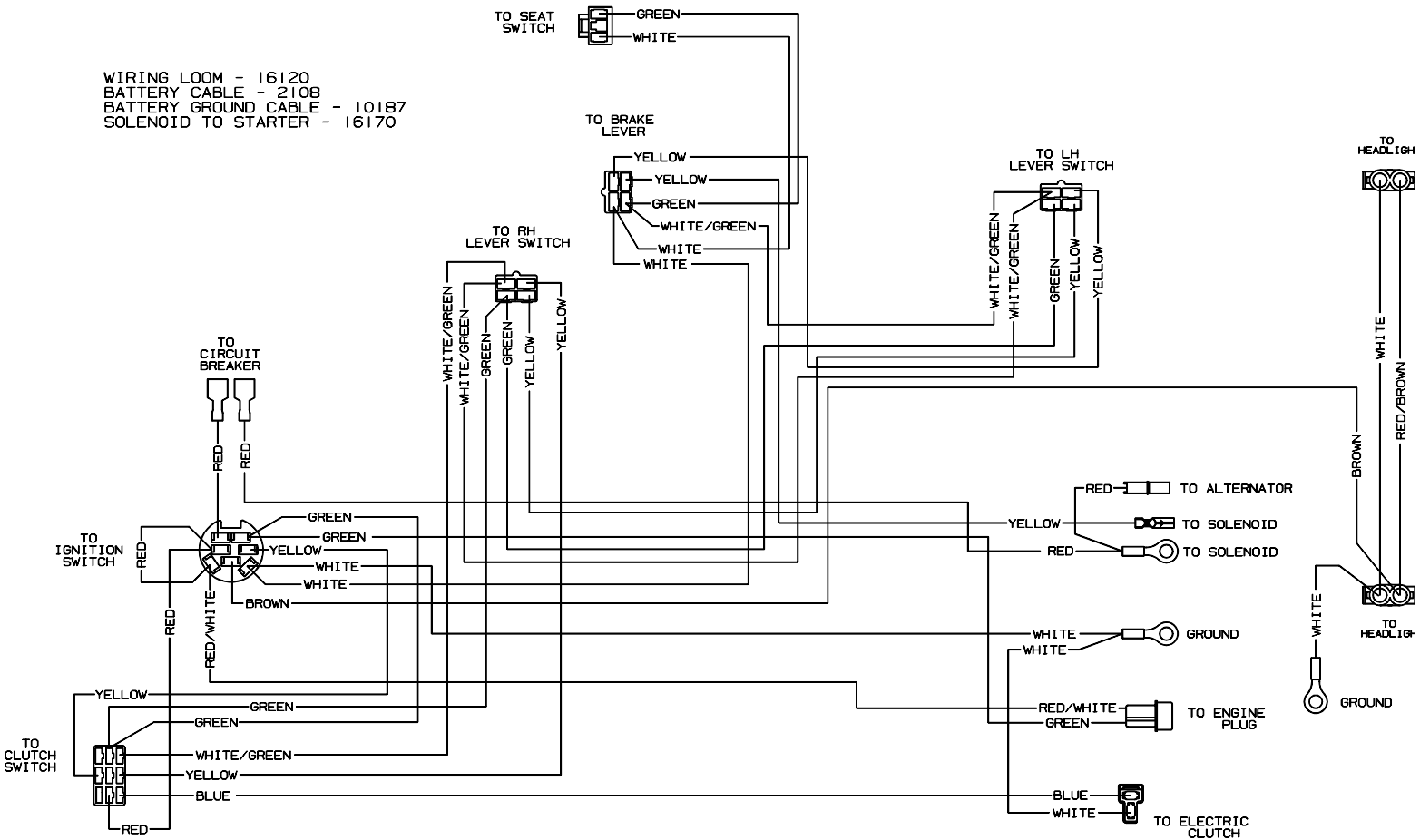
WIRING LOOM - 16120
BATTERY CABLE - 2108
BATTERY GROUND CABLE - 10187
SOLENOID TO STARTER - 16170
TO SEAT SWITCH
GREEN
WHITE
TO BRAKE LEVER
YELLOW
YELLOW
GREEN
WHITE/GREEN
WHITE
WHITE
TO RH LEVER SWITCH
WHITE/GREEN
WHITE/GREEN
GREEN
GREEN
YELLOW
YELLOW
TO LH LEVER SWITCH
WHITE/GREEN
WHITE/GREEN
GREEN
YELLOW
YELLOW
TO HEADLIGH
WHITE
RED/BROWN
BROWN
TO CIRCUIT BREAKER
RED
RED
TO IGNITION SWITCH
RED
GREEN
GREEN
YELLOW
WHITE
WHITE
BROWN
RED
RED/WHITE
RED
TO ALTERNATOR
YELLOW
TO SOLENOID
RED
TO SOLENOID
WHITE
GROUND
WHITE
TO HEADLIGH
WHITE
GROUND
RED/WHITE
GREEN
TO ENGINE PLUG
YELLOW
GREEN
GREEN
TO CLUTCH SWITCH
WHITE/GREEN
YELLOW
BLUE
RED
BLUE
WHITE
TO ELECTRIC CLUTCH