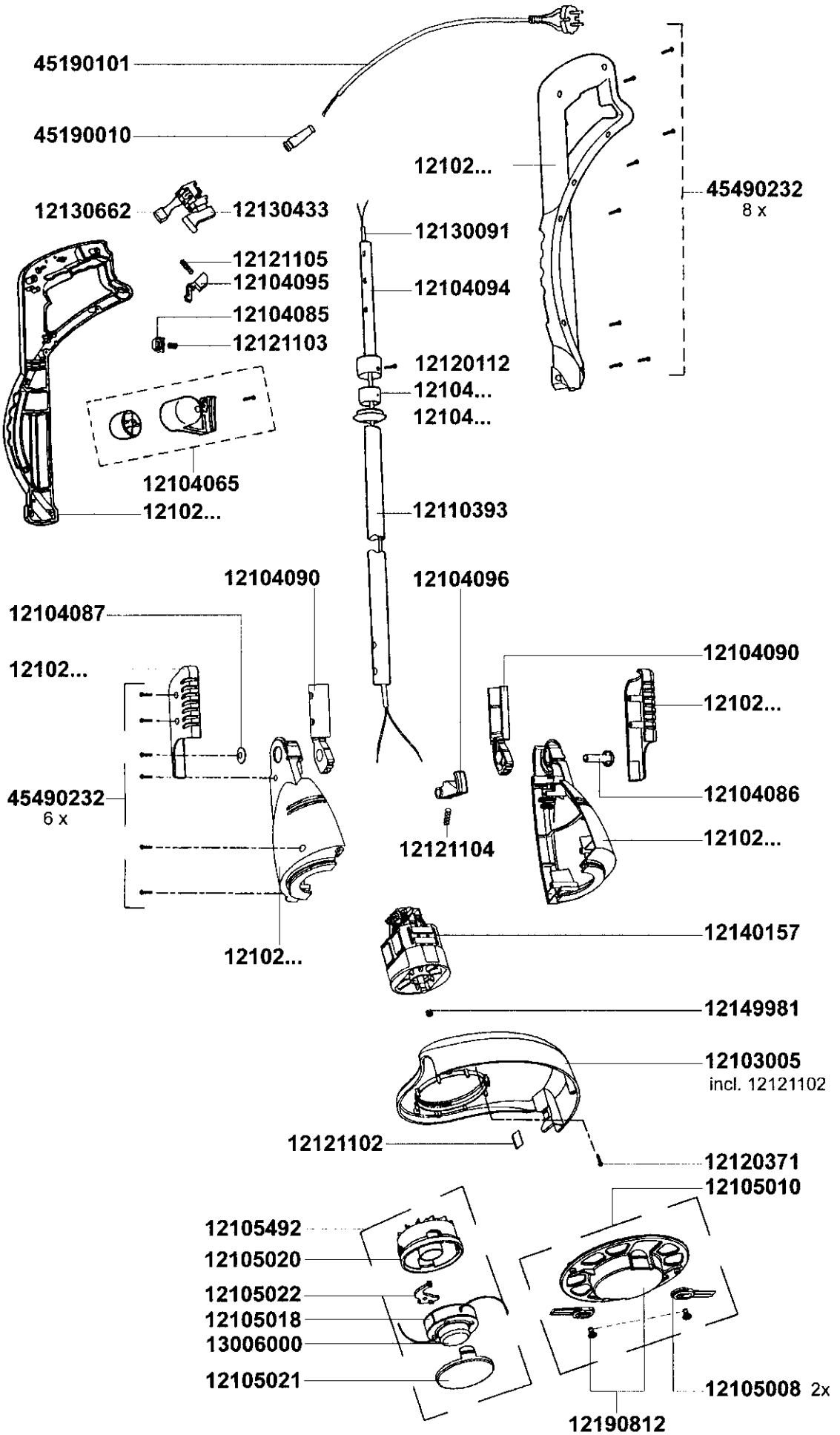

RT 4006 Twincut